FLORESTONE
A spec above.

SEACHROME

Seachrome Corporation
1906 East Dominguez Street
Long Beach, California 90810
Phone: (800) 955-2476
Fax: (800) 444-3380

Description:

GSS-240-HCR
24" Straight Grab Bar
(Satin Stainless Finish)

Customer:

Customer Part #

05-17-2021

INTERPRET GEOMETRIC
TOLERANCING PER: ASME Y14.5-2009
UNLESS OTHERWISE SPECIFIED:
DIMENSIONS ARE IN INCHES [MM]

TOLERANCES:	DECIMALS	
FRACTIONAL±1/64	.X	±0.1
ANGLES±1°	.XX	±0.02

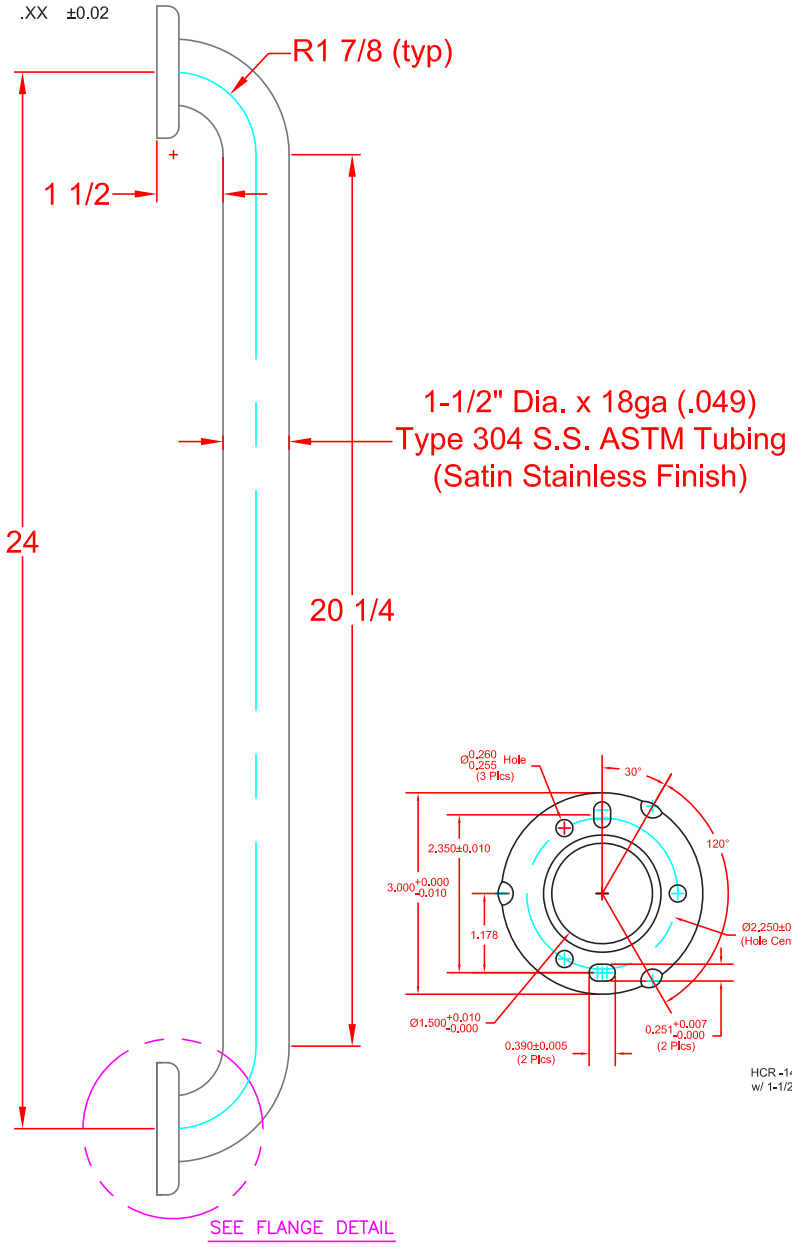

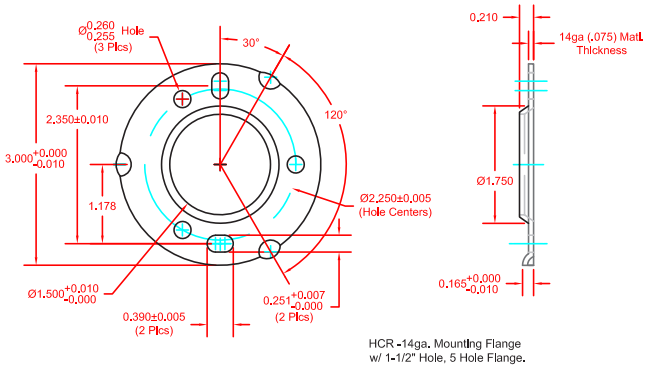

Proprietary & Confidential
This drawing and the information contained herein is the property of Seachrome Corporation and shall not be reproduced, copied, or disclosed in whole or in part, or used in manufacturing, or for any other purpose without the written permission of Seachrome Corporation.

Hardware Package Includes:
(6) #10 x 2-1/2" Phillips Pan Head Sheet Metal Screw