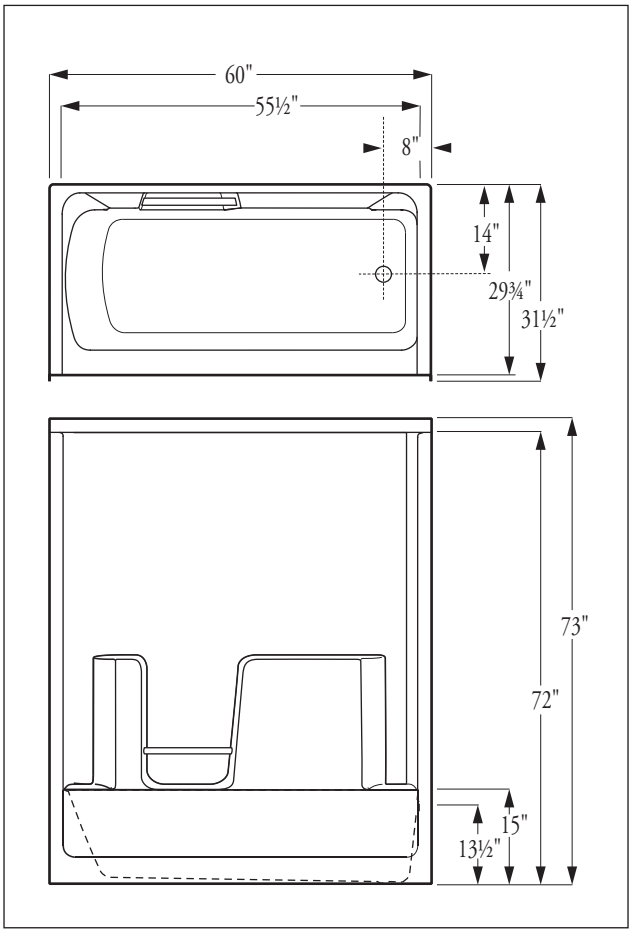

Bathing Area 53 x 21½ x 11½

Dimensions may vary ± ¼" inch.
Please check unit before installation.

Florestone Model 6032TS-3W Tub/ Shower

60" X 31½" X 74"
Weight: 128 lbs.

Architect's Specifications

Furnish and install one piece tub/shower unit Model 603218-3W as manufactured by Florestone Products Company. Unit to be manufactured of gel-coated fiberglass meeting Class C Flame Retardance and to be supplied with slip-resistant floor laminated for extra rigidity. Color will be white (unless otherwise specified).

Specify RH or LH drain.

Standard Color: White.

Standard feature: Acrylic Towel Bar.

Optional Colors

Colors matching most major manufacturers' colors are available.

Standards

I.A.P.M.O. Listed
File 0687
ANSI-Z-124.2

FLORESTONE
A Spec Above.™

FLORESTONE PRODUCTS CO., INC.
2851 Falcon Drive • Madera, CA 93637
T. 559.661.4171 • T. 800.446.8827
F. 559.661.2070 • florestone.com

Model 6032TS-3W

Model 6042TS-3WTB

Florestone
Model 6042TS-3WTB
Tub / Shower

60" x 43¼" x 73"
Weight: 175 lbs.

Architect's Specifications

Furnish and install one piece tub/shower unit Model i as manufactured by Florestone Products Company. Unit to be manufactured of gel-coated fiberglass meeting Class C Flame Retardance and to be supplied with slip-resistant floor laminated for extra rigidity. Color will be white (unless otherwise specified).

Specify RH or LH drain.

Standard Color: White.

Standard feature: Acrylic Towel Bar.

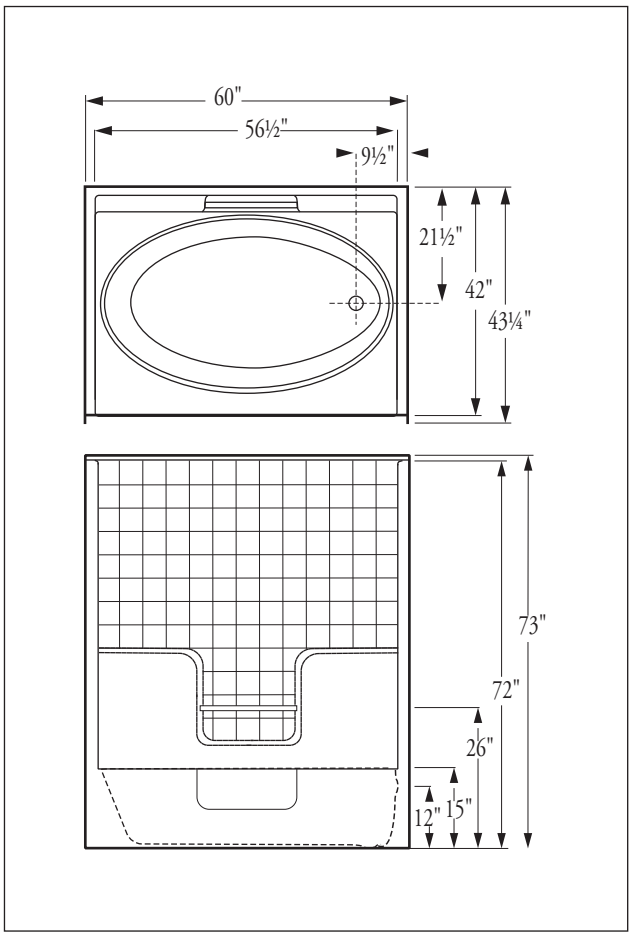

Optional Colors

Colors matching most major manufacturers' colors are available.

Standards:

I.A.P.M.O. Listed
File 0687
ANSI-Z-124.2

FLORESTONE
A Spec Above.™

FLORESTONE PRODUCTS CO., INC.

2851 Falcon Drive • Madera, CA 93637

T. 559.661.4171 • T. 800.446.8827

F. 559.661.2070 • florestone.com

Bathing Area 52½ x 29½ x 12

Dimensions may vary ± ¼" inch.
Please check unit before installation.

Model 6036TS-3WTB

Florestone
Model 6036TS-3WTB
Tub / Shower

60" x 37" x 73"
Weight: 150 lbs.

Architect's Specifications

Furnish and install one piece tub/shower unit Model 6036TS-3WTB as manufactured by Florestone Products Company. Unit to be manufactured of gel-coated fiberglass meeting Class C Flame Retardance and to be supplied with slip-resistant floor laminated for extra rigidity. Color will be white (unless otherwise specified).

Specify RH or LH drain.

Standard Color: White.

Standard feature: Acrylic Towel Bar.

Optional Colors

Colors matching most major manufacturers' colors are available.

Standards:

I.A.P.M.O. Listed
File 0687
ANSI-Z-124.2

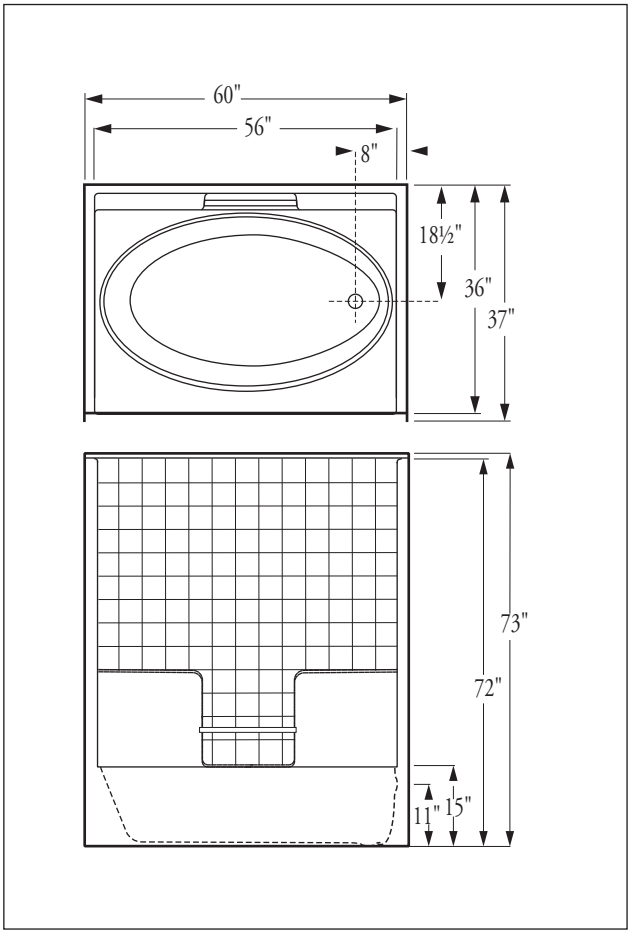

Bathing Area 51 x 25½ x 11

Dimensions may vary ± ¼" inch.
Please check unit before installation.

FLORESTONE
A Spec Above.™

FLORESTONE PRODUCTS CO., INC.

2851 Falcon Drive • Madera, CA 93637

T. 559.661.4171 • T. 800.446.8827

F. 559.661.2070 • florestone.com

Florestone Model 6036TS-3W Tub / Shower

60" x 34½" x 72½"
Weight: 135 lbs.

Architect's Specifications

Furnish and install one piece tub/shower unit Model 6036TS-3W as manufactured by Florestone Products Company. Unit to be manufactured of gel-coated fiberglass meeting Class C Flame Retardance and to be supplied with slip-resistant floor laminated for extra rigidity. Color will be white (unless otherwise specified).

Specify RH or LH drain.

Standard Color: White.

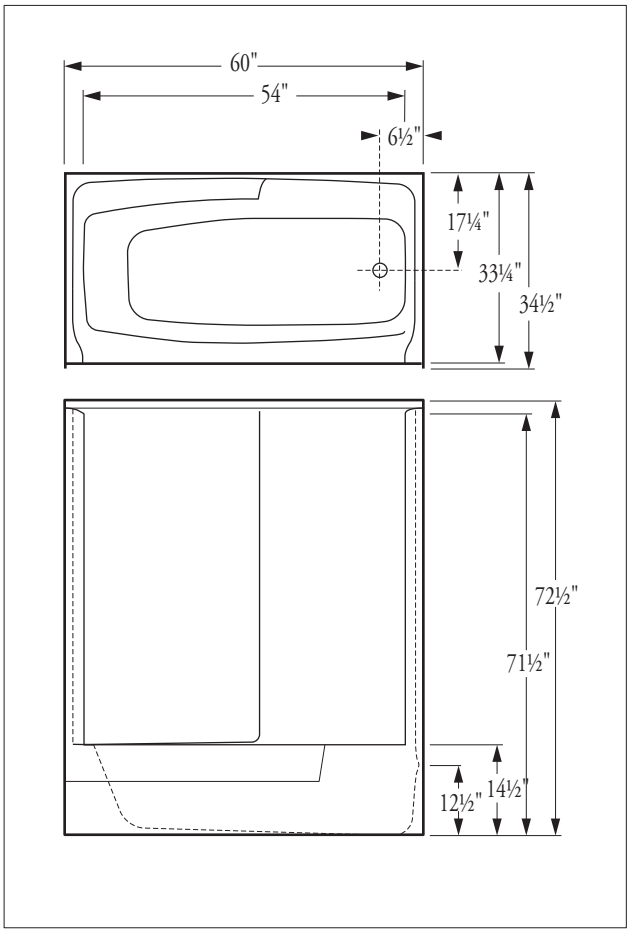

Bathing Area 54 x 24½ x 12½

Dimensions may vary ± ¼" inch.
Please check unit before installation.

Optional Colors

Colors matching most major manufacturers' colors are available.

Standards

I.A.P.M.O. Listed
File 0687
ANSI-Z-124.2

FLORESTONE
A Spec Above.™

FLORESTONE PRODUCTS CO., INC.
2851 Falcon Drive • Madera, CA 93637
T. 559.661.4171 • T. 800.446.8827
F. 559.661.2070 • florestone.com

Model 6036TS-3W

Florestone Model 6034TS-3W Tub / Shower

60" x 33" x 72½"
Weight: 130 lbs.

Architect's Specifications

Furnish and install one piece tub/shower unit Model 6034TS-3W as manufactured by Florestone Products Company. Unit to be manufactured of gel-coated fiberglass meeting Class C Flame Retardance and to be supplied with slip-resistant floor laminated for extra rigidity. Color will be white (unless otherwise specified).

Specify RH or LH drain.

Standard Color: White.

Standard feature: Acrylic Towel Bar.

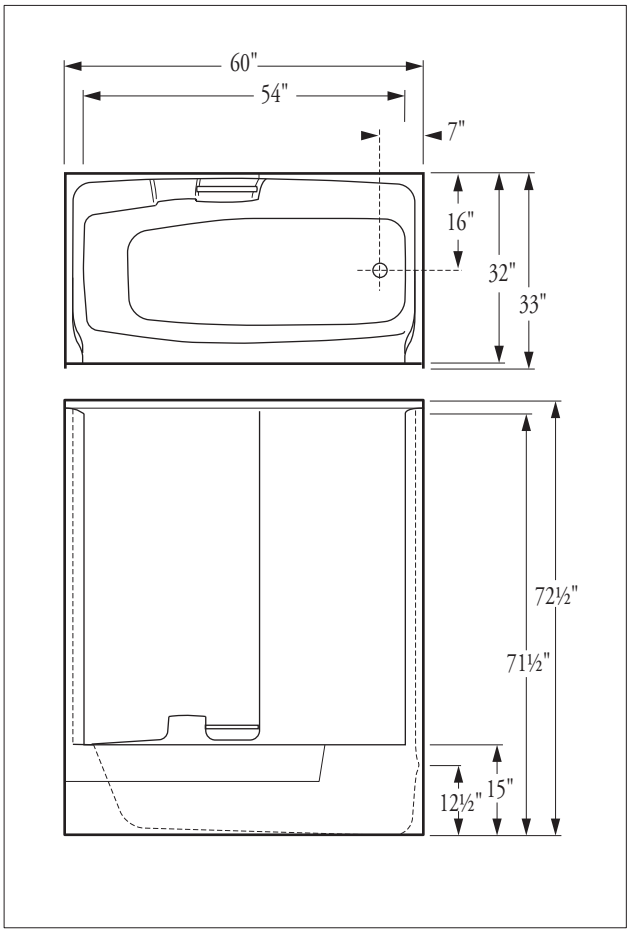

Bathing Area 54 x 24 x 12½

Dimensions may vary ± ¼" inch.
Please check unit before installation.

Optional Colors

Colors matching most major manufacturers' colors are available.

Standards

I.A.P.M.O. Listed
File 0687
ANSI-Z-124.2

FLORESTONE
A Spec Above.™

FLORESTONE PRODUCTS CO., INC.
2851 Falcon Drive • Madera, CA 93637
T. 559.661.4171 • T. 800.446.8827
F. 559.661.2070 • florestone.com

Model 6032TS-3WTB

Florestone
Model 6032TS-3WTB
Tub / Shower

60" x 31½" x 73"
Weight: 128 lbs.

Architect's Specifications

Furnish and install one piece tub/shower unit Model 6032TS-3WTB as manufactured by Florestone Products Company. Unit to be manufactured of gel-coated fiberglass meeting Class C Flame Retardance and to be supplied with slip-resistant floor laminated for extra rigidity. Color will be white (unless otherwise specified).

Specify RH or LH drain.

Standard Color: White.

Standard feature: Acrylic Towel Bar.

Optional Colors

Colors matching most major manufacturers' colors are available.

Standards:

I.A.P.M.O. Listed
File 0687
ANSI-Z-124.2

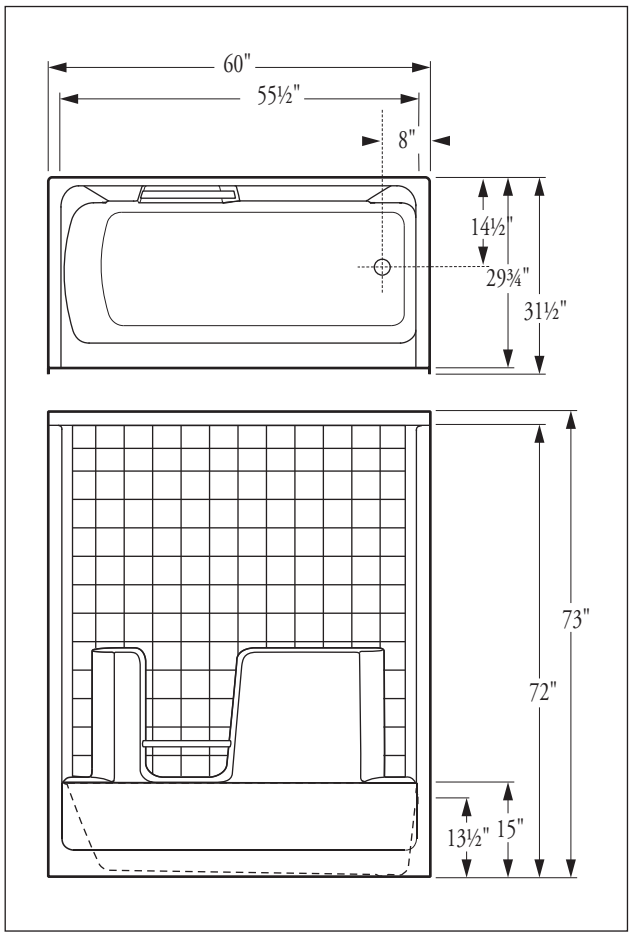

Bathing Area 53 x 21 x 13½

Dimensions may vary ± ¼" inch.
Please check unit before installation.

FLORESTONE
A Spec Above.™

FLORESTONE PRODUCTS CO., INC.

2851 Falcon Drive • Madera, CA 93637

T. 559.661.4171 • T. 800.446.8827

F. 559.661.2070 • florestone.com