3PC-40-40H — ADA Compliant

Florestone Model 3PC-40-40H Barrier-Free Shower

40¼" x 40¼" x 78"
Weight: 215 lbs.

Architect's Specifications

Furnish and install three-piece gel-coated fiberglass shower stall Model 3PC-40-40H designed for barrier-free use as manufactured by Florestone Products Company. Basic shower will conform to ANSI-Z-124.2. and the accessorized module to ANSI-A-117.1. Unit to include stainless steel curtain rod; Symmons® pressure balance mixing valve with concealed check stops; Moen® hand-held shower head with hose and stainless steel slide bar/grab bar; stainless steel corner grab bar; stainless steel recessed soap dish; white naugahyde folding wheelchair transfer seat (specify right or left hand).

Supplied with 2" brass drain.

Shower curtain optional.

Curtain Size: 45" x 75".

Standard Color: White.

Special order colors available.

Standards:

I.A.P.M.O. File No. 0687
ANSI-Z-124.2 & ANSI-A-117.1

ADA COMPLIANT*

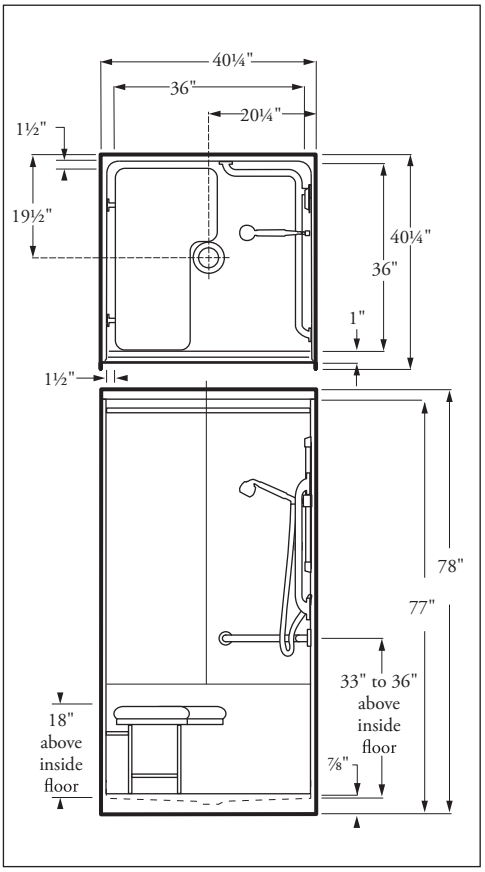

Specify Right or Left Hand Seat

Dimensions may vary ± ¼" inch.
Please check unit before installation.

For barrier-free installation, contractor shall provide ½" minimum recess for curb in sub floor.

ADA compliance when accessories installed by manufacturer.
Note: Exterior floor drain for water run-off recommended.
Symmons® is a Registered Trade Mark of Symmons Industries, Inc.
Moen® is a Registered Trade Mark of Moen Corporation.

Dimensions subject to change without notice.

Contact Florestone Products to verify product specifications.

FLORESTONE
A Spec Above.™

FLORESTONE PRODUCTS CO., INC.

2851 Falcon Drive • Madera, CA 93637

T. 559.661.4171 • T. 800.446.8827

F. 559.661.2070 • florestone.com